QUARTZ
LUXURY

Timberline Square
Wide Fixed
1" I.G.

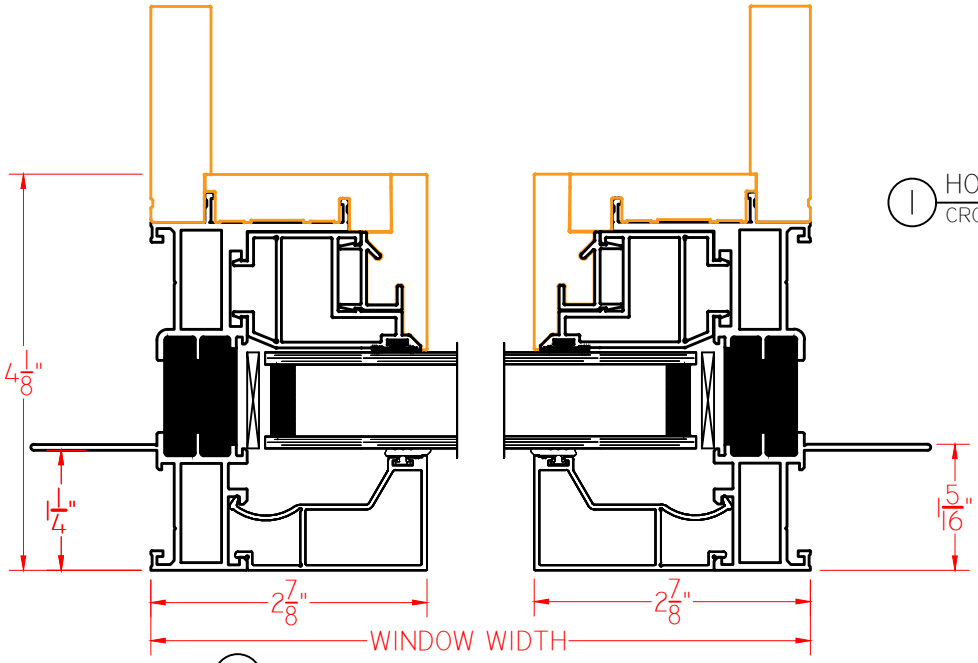

1 HORIZONTAL CROSS SECTION

A VERTICAL CROSS SECTION

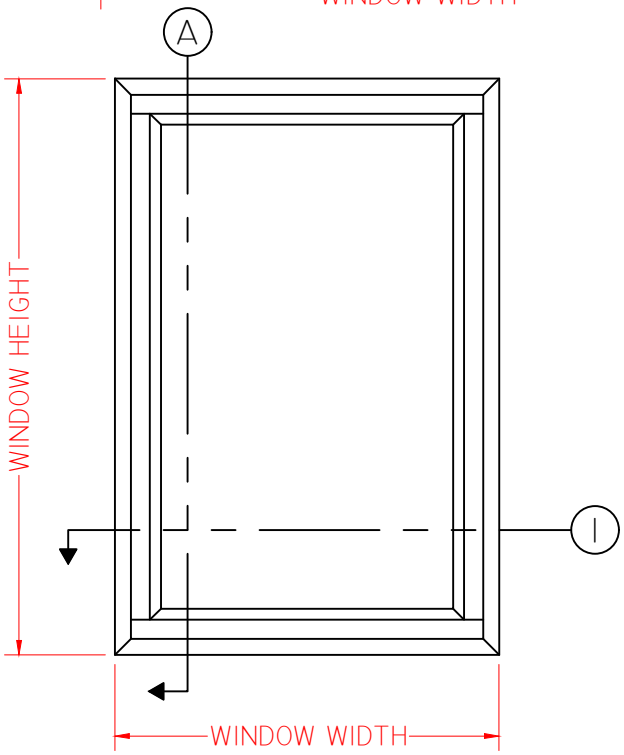

ELEVATION SCALE 1" = 1'-0"

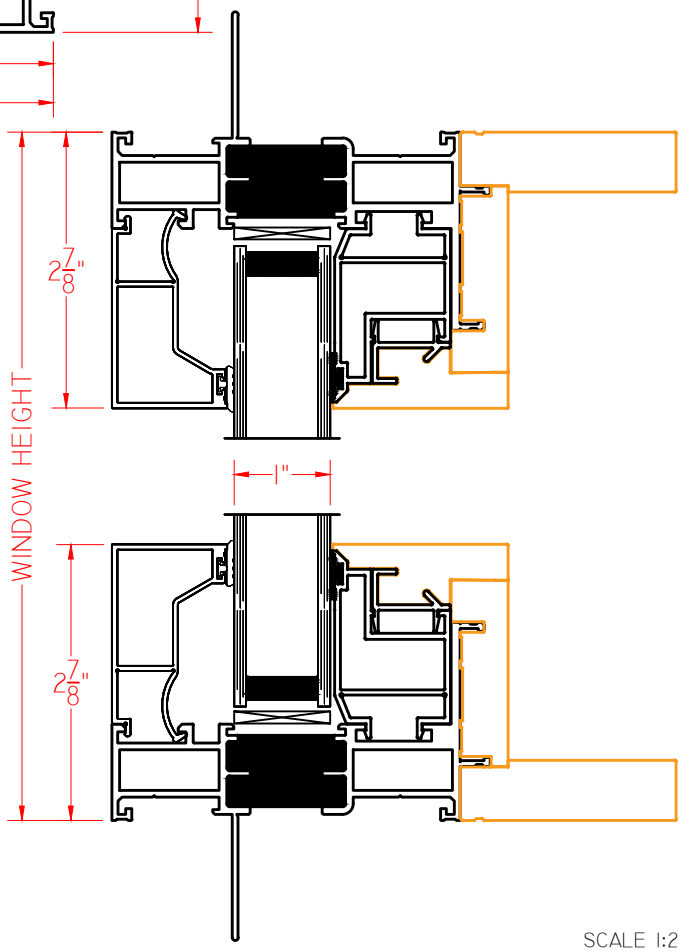

OptiCore Projected 03.16.2020 Version 1.0

SCALE 1:2